FLUIDCO
HYDRAULIC SYSTEMS
Make it Happen!

Dual Pilot Operated Check Valves

VRDE — **DUAL PILOT OPERATED CHECK VALVE**



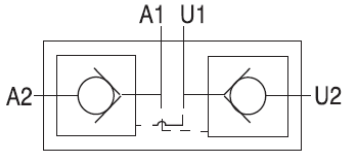

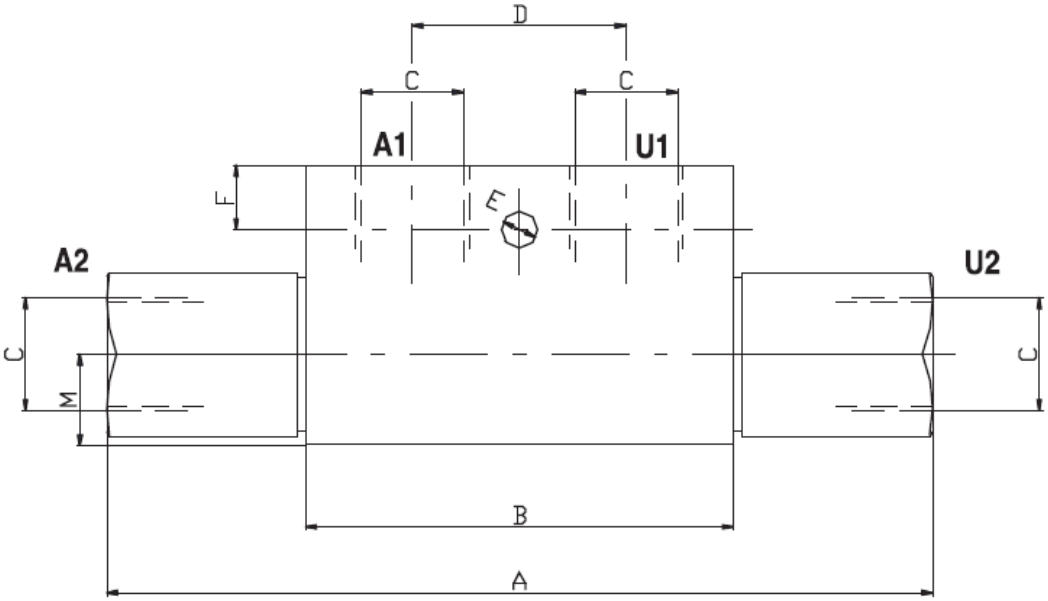

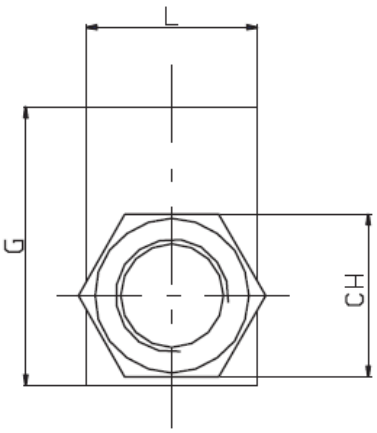

Fluidco Part nr.	*Dimension*	A max	B	C GAS	D	E	F	G	L	M	CH	Peso *Weight* kg
LH-VRDE01	**01**	118	68	1/4	38	7	7	40	30	13	24	0.69
LH-VRDE02	**02**	144	80	3/8	40	8.5	15	50	30	16	27	0.98
LH-VRDE03	**03**	171	90	1/2	40	8.5	15	60	40	20	30	1.72
LH-VRDE04	**04**	196*	107	3/4	60	8.5	16	70	50	23	41	3.11

Dimensione/*Dimension*		01	02	03	04
Pressione max/*Max Pressure*	bar	350	300	300	300
Portata max/*Max Flow*	l/min	30	50	80	120
Rapporto d'apertura/*Pilot Ratio*		1:4.5	1:4	1:4	1:4
Pressione d'apertura/*Cracking Pressure*	bar	4	4	4	4

40 Industry Road, Paarden Eiland, Cape Town, Western Cape Tell: 021 511 0590

FLUIDCO
HYDRAULIC SYSTEMS
Make it Happen!

APPLICATION

This valve is used to block the actuator in position in both directions until pilot pressure is applied.

INSTALLATION

Connect the actuator ports to control to A2 and U2 valve ports and the pressure flow to A1 and U1.

OPERATION

This valve allows flow from A1 port to A2 port up to the actuator to which it is connected. At the same time, the pressure flow in A1 opens the relief valve on U2 port, thus allowing the flow return towards U1.
The opposite situation occurs when pressure flow passes from U1 port to U2 port.

FEATURES

Steel body - Zinc plated - Hardened internal components - O-ring seal on pilot piston - No leakage.