FLUIDCO
HYDRAULIC SYSTEMS
Make it Happen!

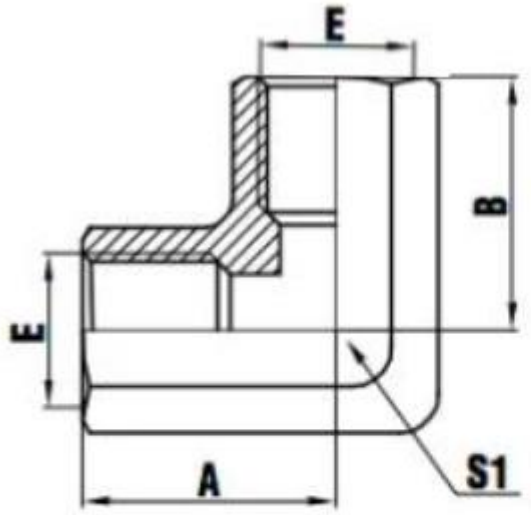

7B9

90° BSP FEMALE

PART NO.	THREAD	DIMENSIONS		
	E	A	B	S1
7B9-02	G1/8"X28	17	17	14
7B9-04	G1/4"X19	21	21	17
7B9-06	G3/8"X19	24	24	22
7B9-08	G1/2"X14	27	27	26
7B9-12	G3/4"X14	33	33	34
7B9-16	G1"X11	38	38	41
7B9-20	G1.1/4"X11	45	45	54
7B9-24	G1.1/2"X11	47	47	56
7B9-32	G2"X11	60	60	68

40 Industry Road, Paarden Eiland, Cape Town, Western Cape Tell: 021 511 0590

FLUIDCO
HYDRAULIC SYSTEMS
Make it Happen!

B7-9

90° ELBOW FEMALE BSP	Part No.	Thread	
		E	F
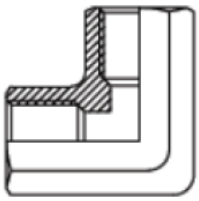	B7049	G1/4"X19	G1/4"X19
	B7069	G3/8"X19	G3/8"X19
	B7089	G1/2"X14	G1/2"X14
	B7129	G3/4"X14	G3/4"X14
	B7169	G1"X11	G1"X11
	B7209	G1.1/4"X11	G1.1/4"X11
	B7249	G1.1/2"X11	G1.1/2"X11
	B329	G2"X11	G2"X11

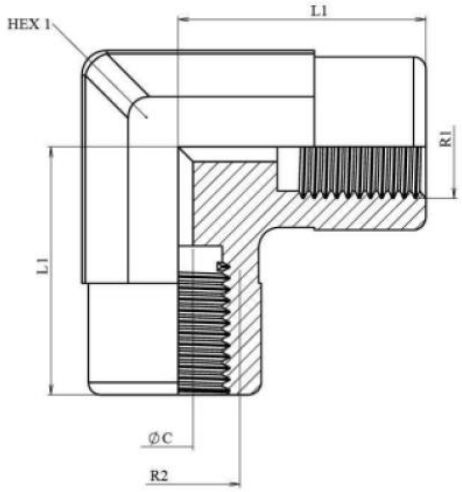

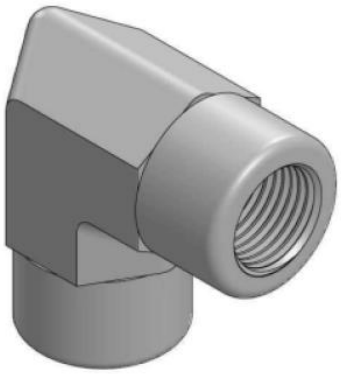

R1	R2	L1	HEX 1	ØC
1/8" BSP	1/8" BSP	17	14	8,7
1/4" BSP	1/4" BSP	26	17	8
3/8" BSP	3/8" BSP	30	19	12
1/2" BSP	1/2" BSP	35	24	17,5
3/4" BSP	3/4" BSP	42	27	16
1" BSP	1" BSP	47	36	25
1"1/4 BSP	1"1/4 BSP	43	48	39,3