Additional Data/Spec Sheet

NG6 Check Modular Sandwich Valve – Control Line Port A – 2Bar Cracking Pressure

MC*-01 Check Valves(Modular Type)
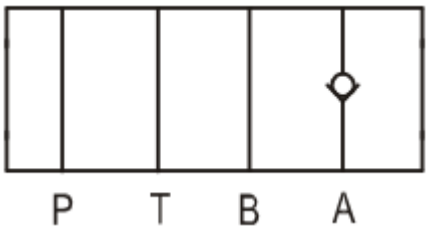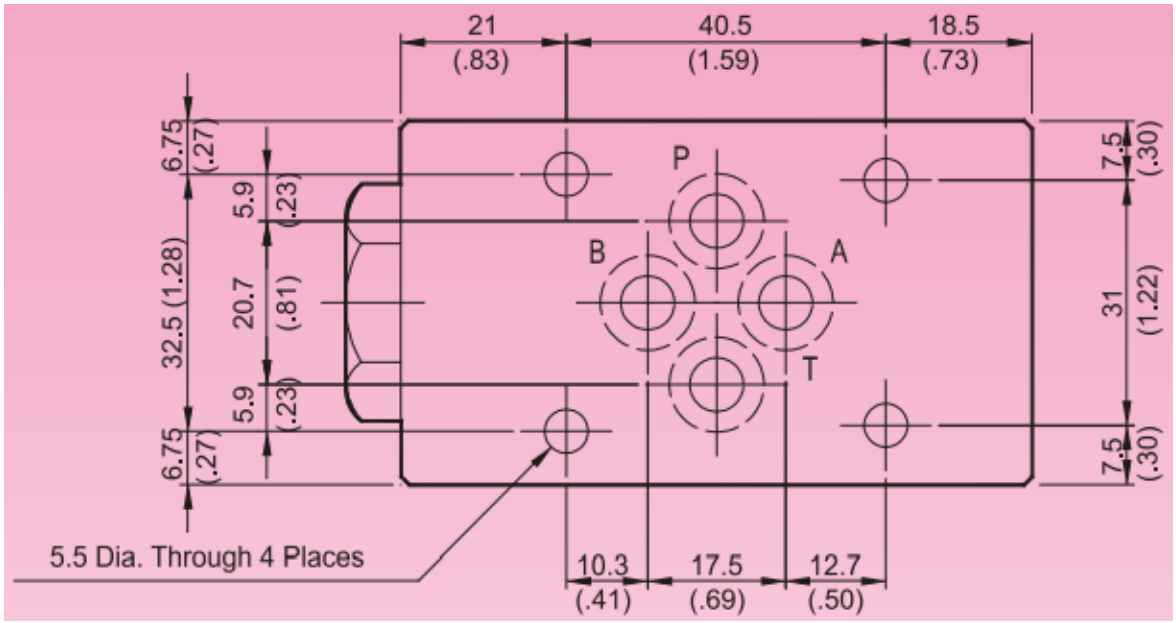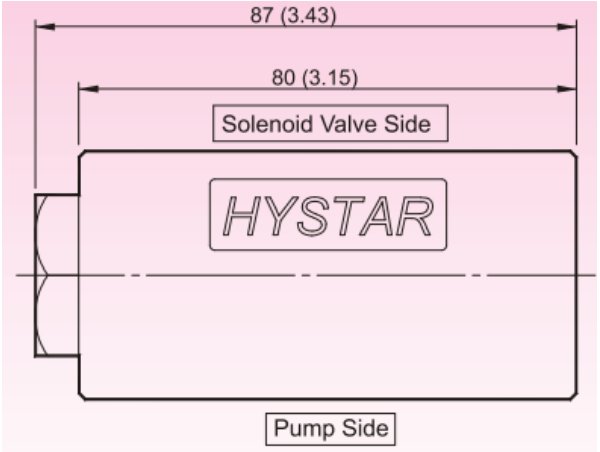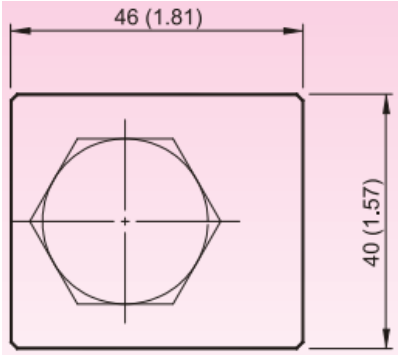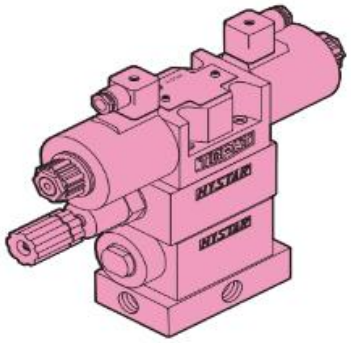
MOUNTING SURFACE:MC*-01-CETOP3
ISO 03-NFPAD03