# Additional Data/Spec Sheet

NG6 Relief Modular Sandwich Relief Valve – Control Port P – 70~210Bar

**MB*-01** Relief Valves(Modular Type)
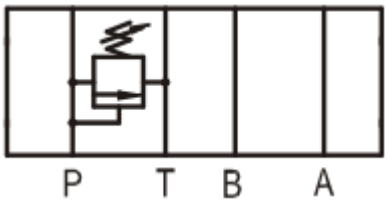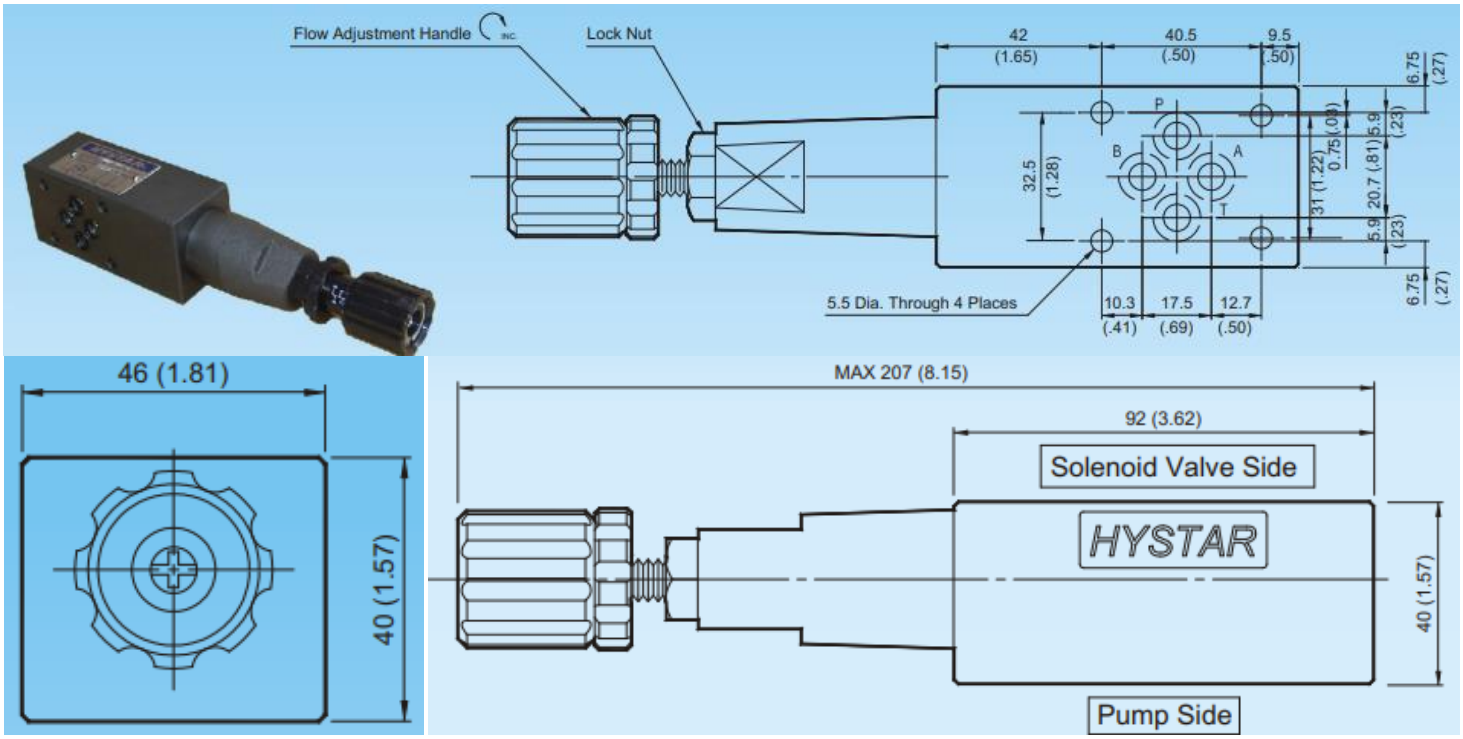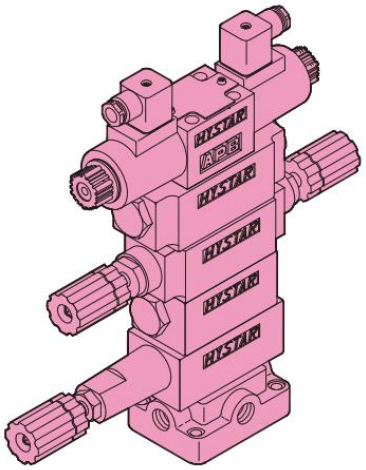
MOUNTING SURFACE:MB*-01-CETOP3
ISO 03-NFPAD03